RV1S FRONT WHEEL COMPLETE V1.0

* ##-TO SPECIFY COLOR
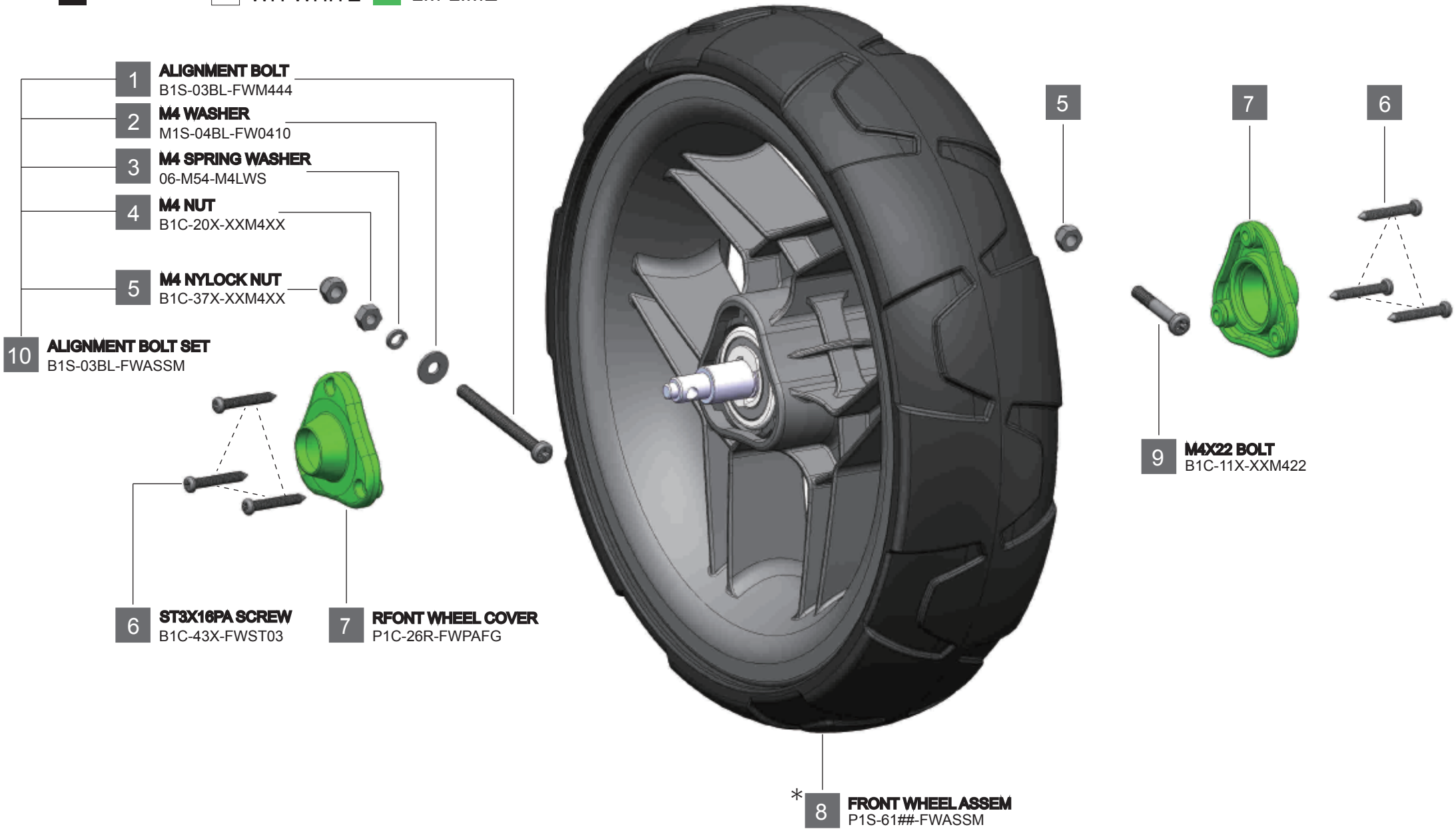
BK-BLACK WH-WHITE LM-LIME